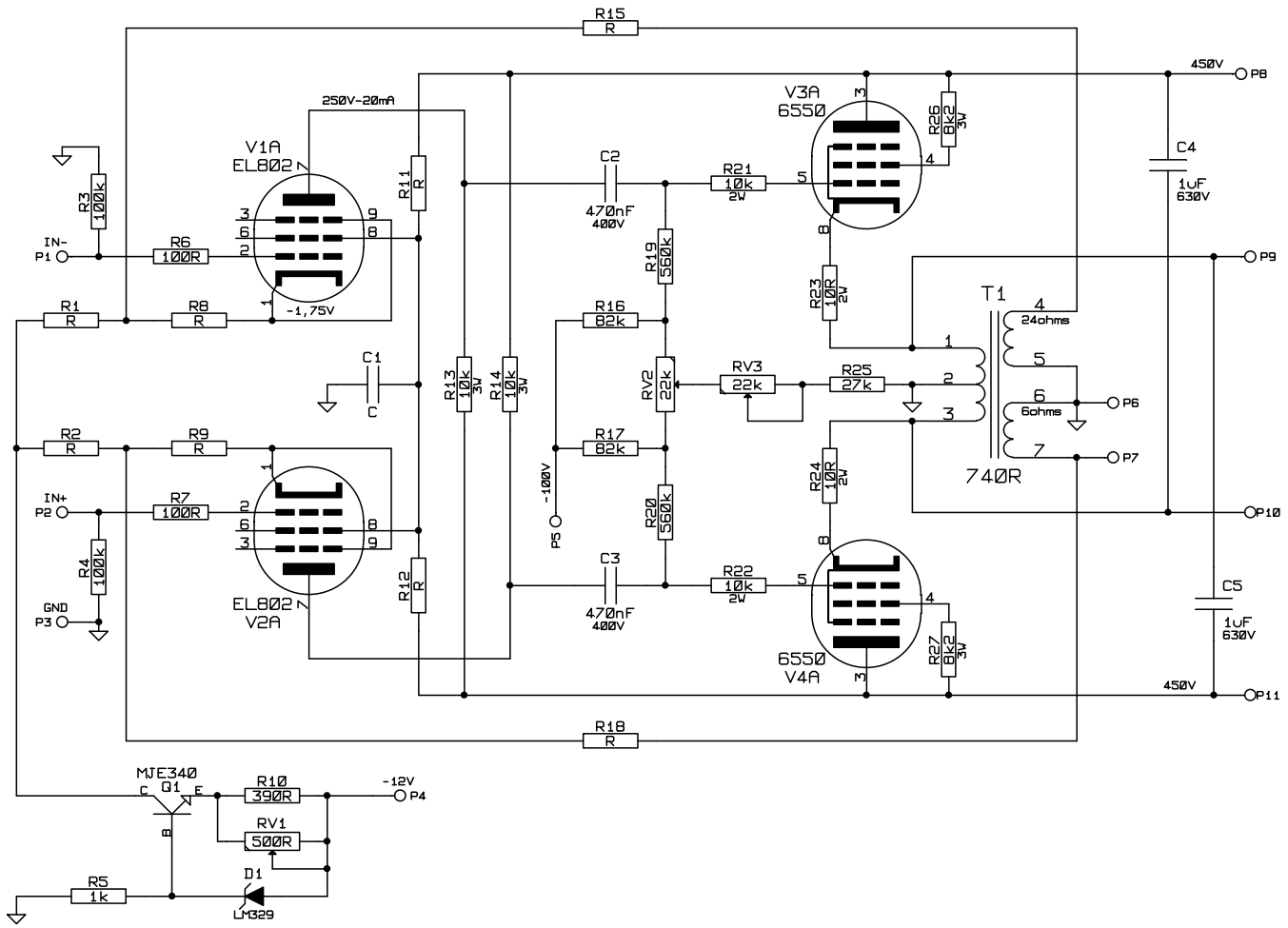

File: CirclotronEL802.sch		
Sheet: /		
Title:		
Size: A4	Date: 8 mar 2009	Rev:
KiCad E.D.A. EESchema (20090216-RC5)		Id: 1/1